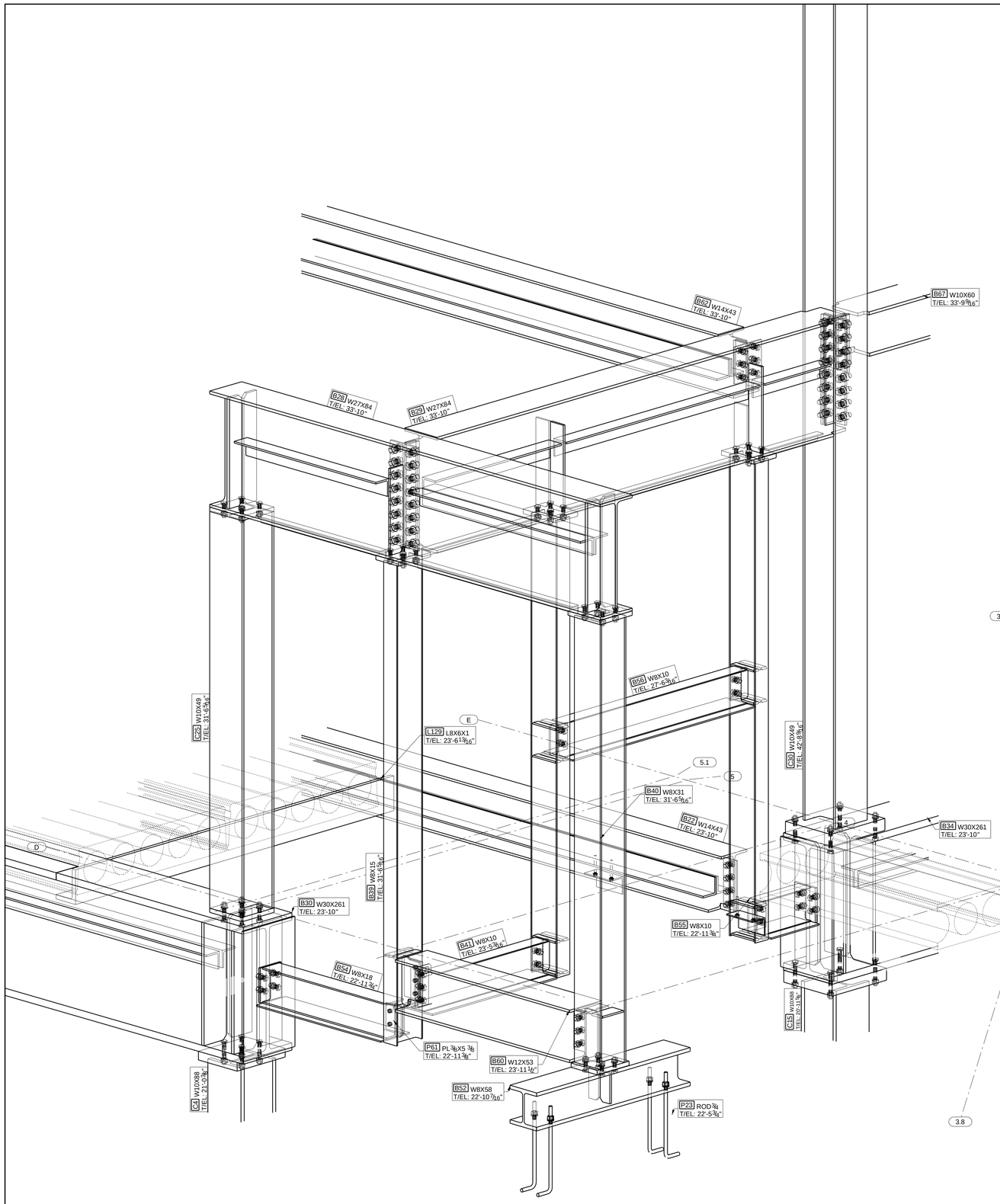

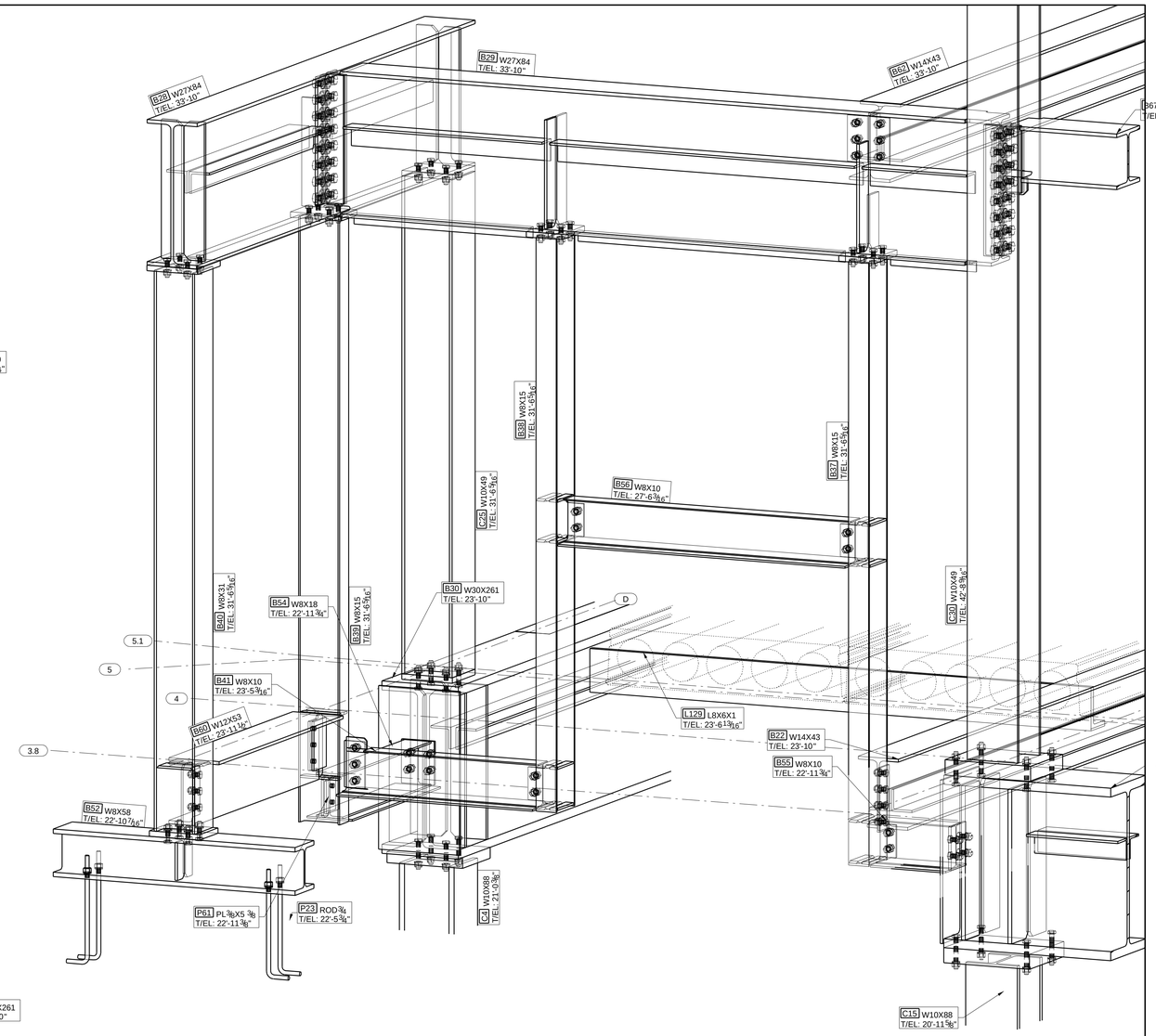

e-STEELstudioLtd.
field verification + detailing + shop drawings

REV.	DESCRIPTION	DATE	DWN	CHK

GENERAL NOTES

MATERIAL: AB=A307; W-SHAPE=A992; CHANNEL, ANGLE, PLATE=A36; HSS AND PIPE =A500 GR-B

HOLES: 13/16 DIA. U/N | CONN'S: 3/4" DIA BOLTS | ELECTRODES: E70XX

SURFACE PREP. AND PAINT: | REF. DRG.

DESCRIPTION: 3RD FLOOR HANGERS

PROJECT NAME
LOCATION

DRAWN BY: e-STEELstudio Ltd. www.e-steelstudio.com

DRAWING FILE MODIFY	DATE 08/09/2008
DRAWN BY	DATE 08/09/2008
CHKD. BY	DATE
JOB No.	DRG. No.